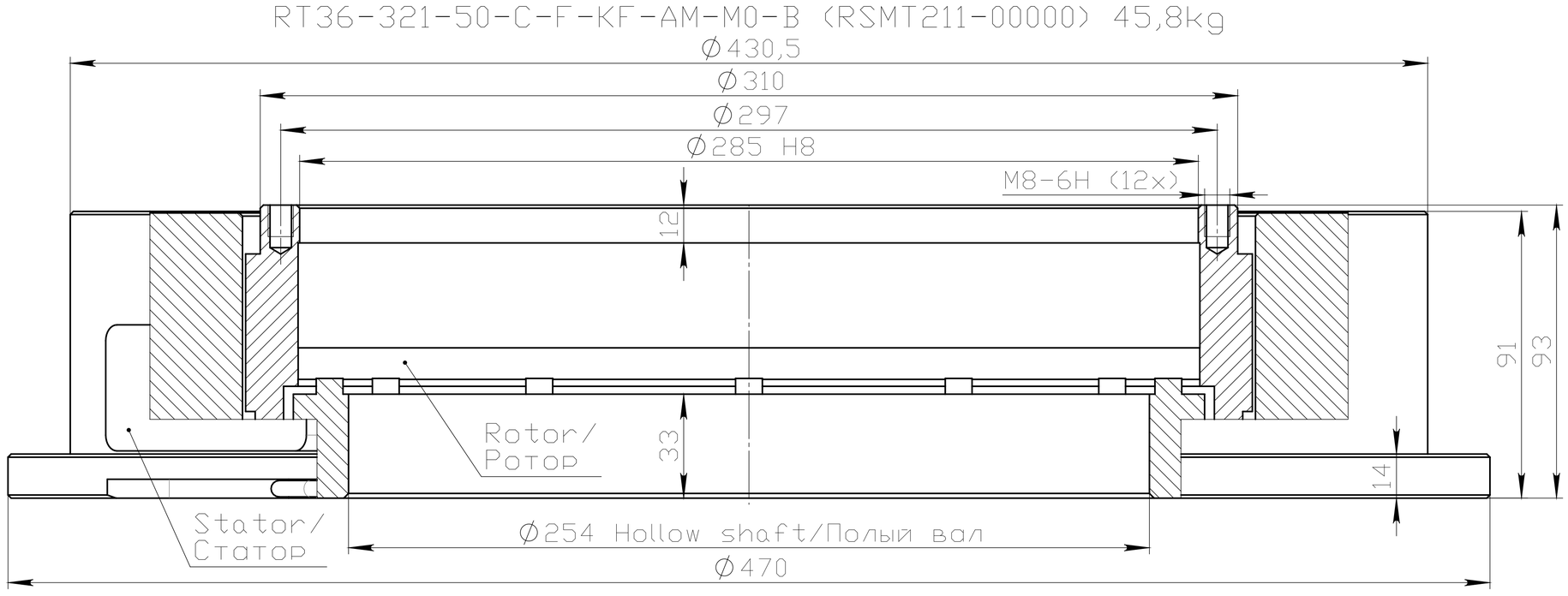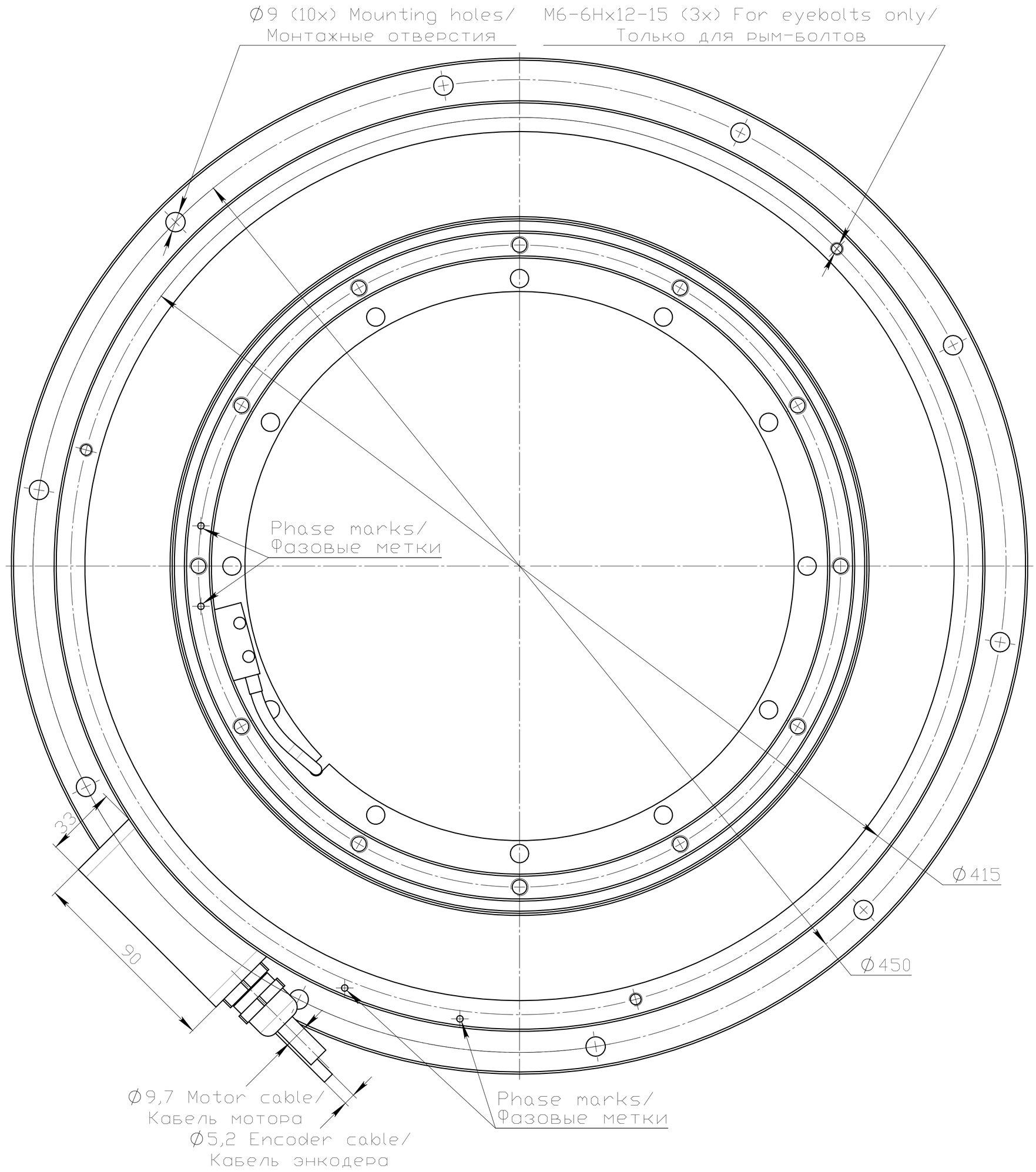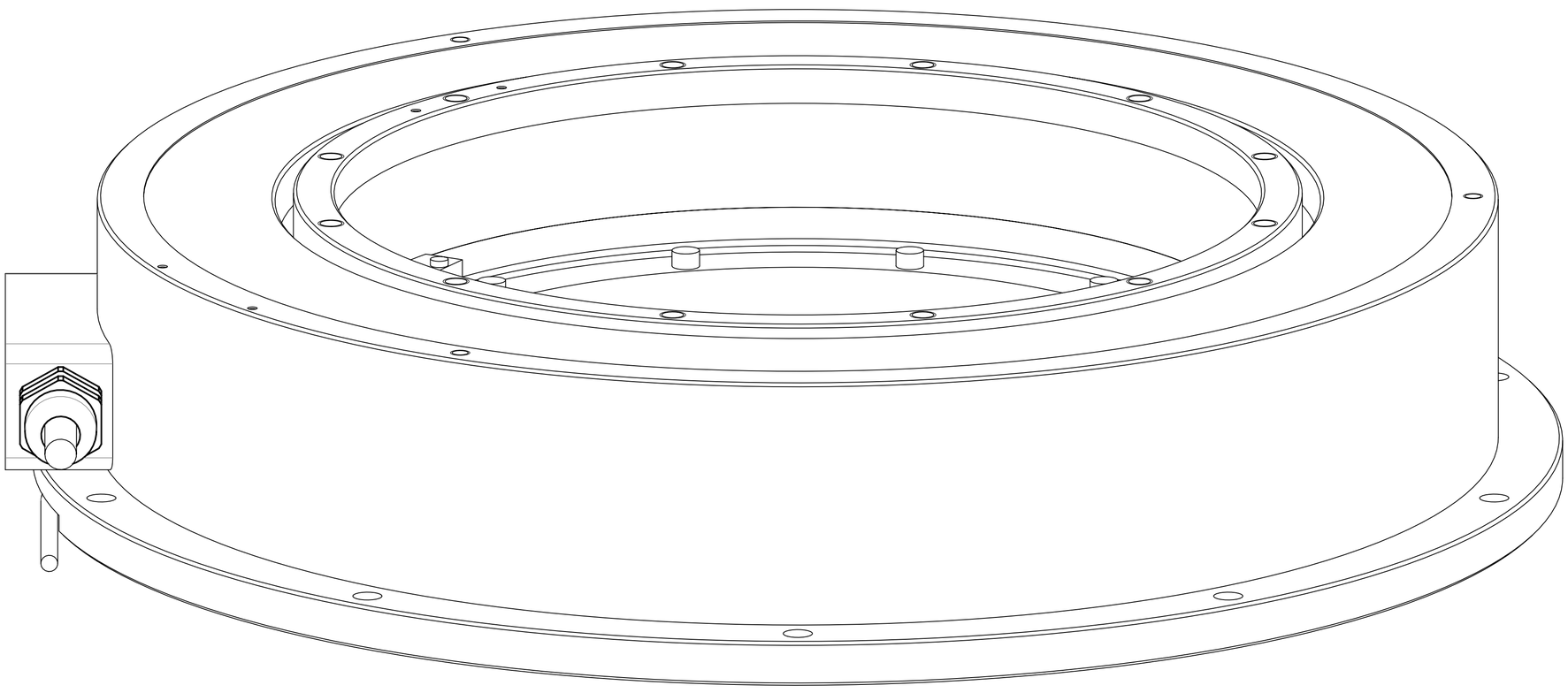RT36-321-50-C-F-KF-AM-M0-B (RSMT211-00000) 45,8kg